DISCLAIMER:
The use of this standard is governed by the "Texas Engineering Practice Act". No warranty of any kind is made by TxDOT for any purpose whatsoever. TxDOT assumes no responsibility for the conversion of this standard to other formats or for incorrect results or damages resulting from its use.

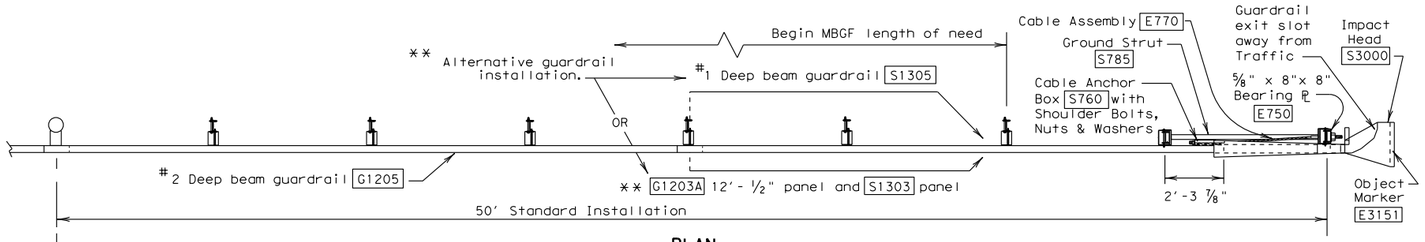

PLAN

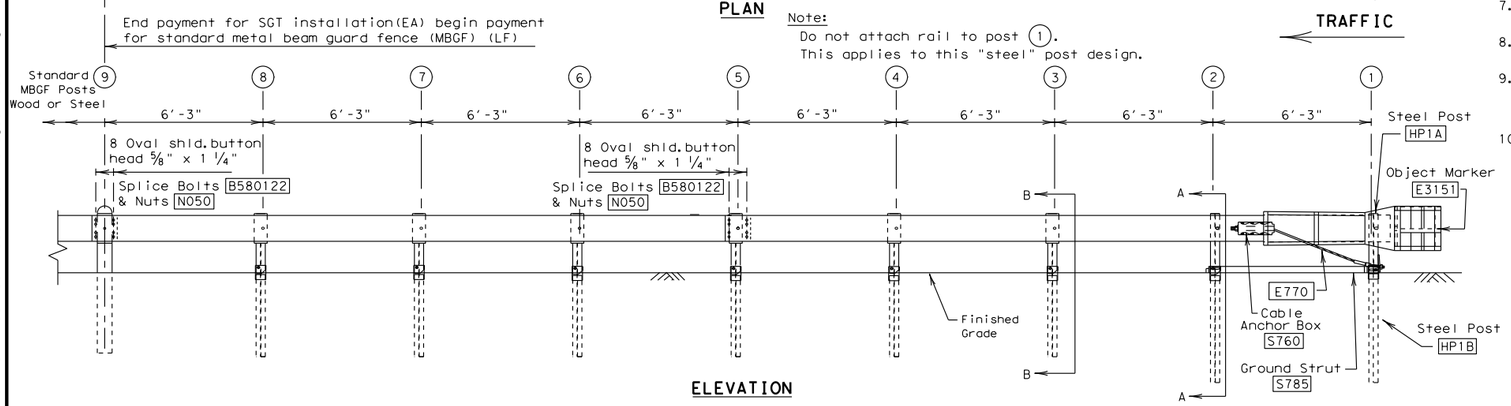

ELEVATION

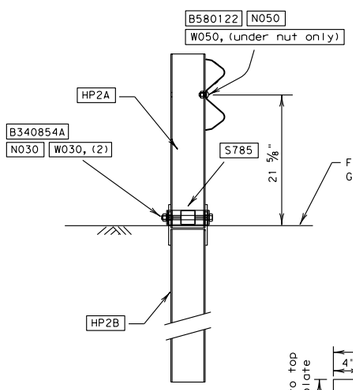

SECTION A-A
at post (2)

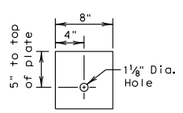

BEARING PLATE
E750

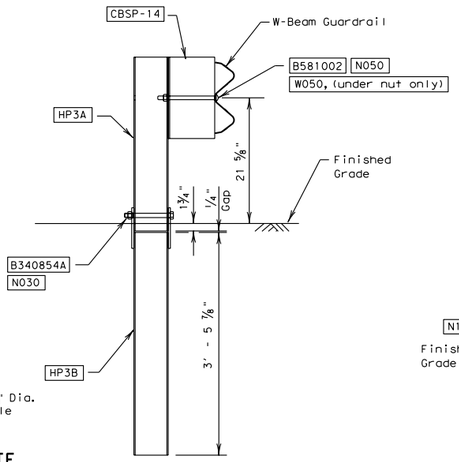

SECTION B-B
at post (3) thru (8)

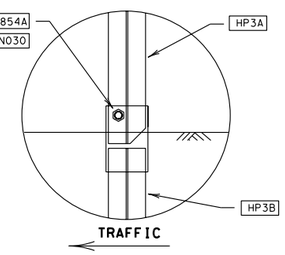

HINGED POST
Posts 3 thru 8

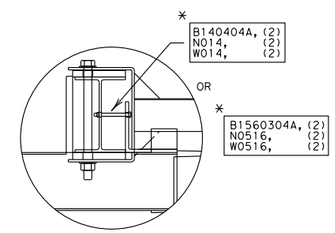

IMPACT HEAD CONNECTION DETAIL

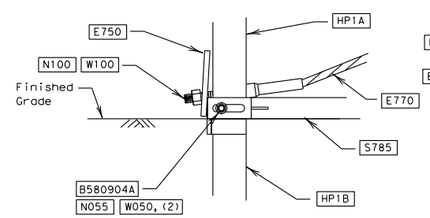

SIDE VIEW

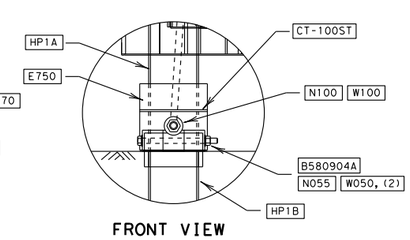

FRONT VIEW

POST #1 CONNECTION DETAILS

GENERAL NOTES

1. For additional information contact: Interstate Steel Inc. (432) 263-3735
2. All bolts, nuts cable assemblies, cable anchors, steel tubes & bearing plates shall be galvanized.
3. SGT's placed within the "minimum" 150 ft. radius, shall be installed straight. Standard rail elements may be installed within the radius, without special fabrication.
4. A flare rate of 25:1 may be used over the first 50 ft. of the system to prevent the terminal head from encroaching the shoulder. The flare may be decreased or eliminated for specific installations, if directed by the Engineer.
5. The lower sections of the post shall not protrude more than 4 inches above finished ground. Site grading may be necessary to meet this requirement.
6. The lower section of the steel posts should not be driven with the upper post attached. If the post is placed in a drilled hole, the backfill material must be satisfactorily compacted to prevent settlement.
7. If solid rock is encountered. See manufacturer's installation manual for the proper installation guidance.
8. The breakaway cable assembly must be taut. A locking device,(vice grips or channel lock pliers) should be used to prevent the cable from twisting when tightening the nuts.
9. Hinge bolts shall not be set below finished grade. At curb locations the posts shall be installed at the proper grade elevation behind the curb. The posts will then require field drilling new holes to accommodate the rail to post connection bolt to maintain the proper height of the rail above the gutter pan. The excess post length above the rail will be removed if directed by the Engineer.
10. An object marker shall be installed on the front of the impact head as detailed on D&OM(VIA).

	ITEM NO.	QTY	BILL OF MATERIALS
	S3000	1	IMPACT HEAD
	S1305	1	W-BEAM GUARDRAIL END SECTION - 12 GA., 25'
	G1205	1	W-BEAM GUARDRAIL - 12 GA., 25'
OR	S1303	1	W-BEAM GUARDRAIL (12 GA.) 12'-6" SKT
OR	G1203A	1	W-BEAM GUARDRAIL (12 GA.) 12'-6"
	HP1A	1	FIRST POST ASSEMBLY TOP, 2'- 4 3/8"
	HP1B	1	FIRST POST ASSEMBLY BOTTOM, 6'- 0"
	HP2A	1	SECOND POST ASSEMBLY TOP, 2'- 6 3/8"
	HP2B	1	SECOND POST ASSEMBLY BOTTOM, 6'- 0"
	HP3A	6	HINGED LINE POST TOP, 2'- 5 5/8"
	HP3B	6	HINGED LINE POST BOTTOM, 3'- 5 7/8"
	E750	1	BEARING PLATE
	S760	1	CABLE ANCHOR BOX
	E770	1	BCT CABLE ANCHOR ASSEMBLY
	S785	1	GROUND STRUT (SPECIAL FOR HINGED POST)
	CBSP-14	6	ROUTED BLOCK
	CT-100ST	1	CABLE TIE - STEEL
	HARDWARE		
	B580122	17	5/8" Dia. x 1 1/4" SPLICE BOLT, POST #2
	B580904A	1	5/8" Dia. x 9" HEX BOLT GR. 5
	B340854A	7	3/4" Dia. x 8 1/2" HEX BOLT GR. 5
	B581002	6	5/8" Dia. x 10" H.G.R. BOLT (Posts 3 Thru 8)
	N050	23	5/8" Dia. H.G.R. NUT (at Splice (16) & Posts 2 Thru 8)
	N055	1	5/8" Dia. HEX NUT (Post 1 only)
	W050	9	H.G.R. WASHER (At Post 1 (2), & Post 2 thru 8)
	N100	2	1" ANCHOR CABLE HEX NUT
	W100	2	1" ANCHOR CABLE WASHER
*	B140404A	2	1/4" x 4" HEX BOLT GR. 5
*	N014	2	1/4" HEX NUT
*	W014	2	1/4" WASHER
OR	B1560304A	2	5/16" x 4" HEX BOLT GR. 5
OR	N0516	2	5/16" HEX NUT
OR	W0516	2	5/16" WASHER
	SB12A	8	CABLE ANCHOR BOX SHOULDER BOLT
	N030	7	3/4" HEX NUT
	N012A	8	1/2" STR. NUT
	W030	2	WASHER
	W012A	8	1/2" STR. WASHER
	E3151	1	OBJECT MARKER (18" x 18")

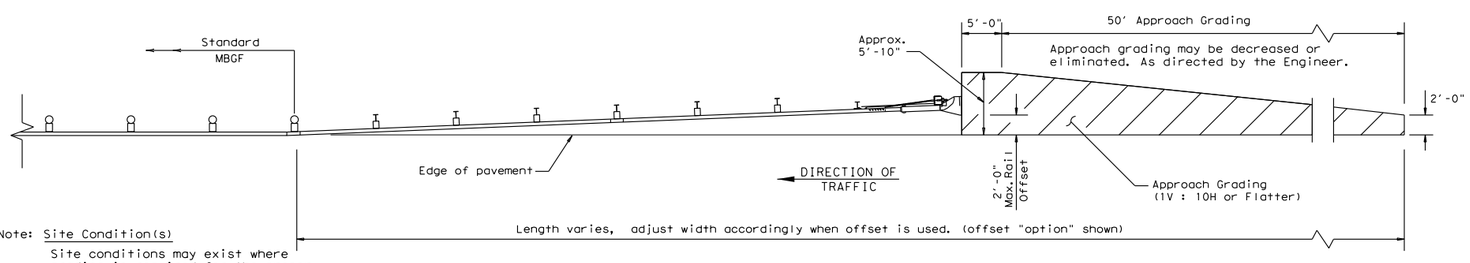

Note: Site Condition(s)
Site conditions may exist where grading is required for the proper installation of metal guard fence and end treatments.

APPROACH GRADING AT GUARDRAIL END TREATMENTS

Texas Department of Transportation — Design Division Standard

SINGLE GUARDRAIL TERMINAL
(SKT 350)
(HINGED STEEL POST)
SGT(8)H-14

FILE: sgt8h14.dgn	DN: TxDOT	CK: AM	DW: BD/VP	CK: VP
© TxDOT February 2003	CONT	SECT	JOB	HIGHWAY
REVISIONS	DIST	COUNTY		SHEET NO.

DATE:
FILE: